THE BODY ELECTRIC

Team 1389
Technical Binder

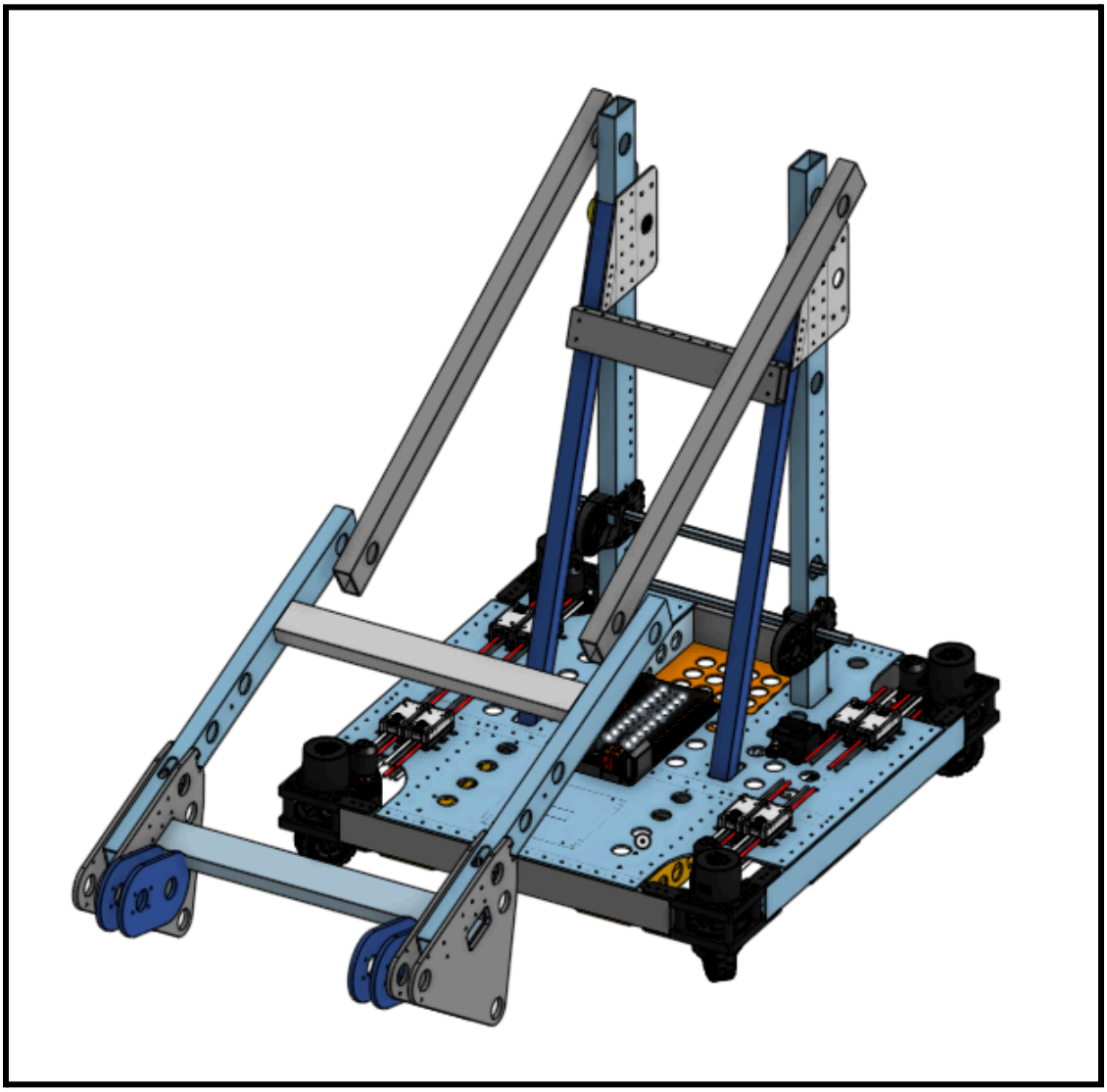

Table of Contents

Game Analysis and Conceptualization
Game Analysis ... 3
Initial Design Goals ... 4

Mechanical Design
Design Overview ... 5
Drivetrain ... 6
Intake ... 8
Arm ... 10

Control System
Overview ... 13
Our Design ... 13
Improvement ... 14

Programming Design
Overview ... 16
Auto-Balancing ... 16
Auto-Positioning ... 17
Path Tracking ... 17

Game Analysis

On January 7, 2023, Team 1389 gathered together to view the live-streamed game reveal for Infinite Recharge with many other teams. After the reveal, we headed back to our lab to break down the game and start coming up with strategies for the season.

In the following analytic discussions, the team sought to identify the best way to score points. We attempted to predict how other teams in the Chesapeake District would perform in order to best set the design requirements and role of our robot. We broke up the different ways to score in FIRST Infinite Recharge and assigned each method a ranking: Common, Uncommon, Rare, and Impossible. At each level of competition, from Districts to the World Championship, we tried to predict what strategies we would see so we could set a goal for our own team's minimum score requirement. After this, we had to decide which goals would be our priorities and which would be less important to us. At the end of this long day, the team set our design requirements and decisions and began working to bring each initial concept to life.

Initial Design Goals

Overview

This season we broke down the game by each of the game pieces and the level at which we aimed to score them. This meant we took a really in-depth look at what we aimed to achieve from the very start of the season, as shown in our Primary, Secondary, and Tertiary goals listed below. We have been using this goal system for years and as it allows a clear map of our priorities and direction for the rest of the season.

- Primary
  - Low Cube Score
  - Low Cone Score
  - Mid Cube Score
  - Ground Cube Intake
  - Ground Cone Intake
  - 7 Cycles
  - Auto Balance in Tele-Op
- Secondary
  - Mid Cone Score
  - High Cube Score
  - 8 Cycles
- Tertiary
  - High Cone Score
  - 10 Cycles

Mechanical Design

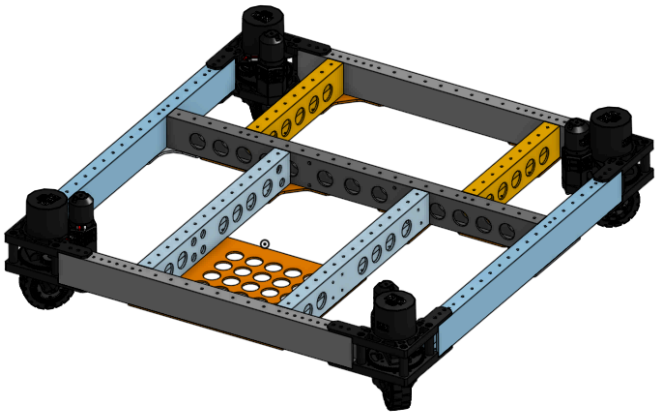

← Drivetrain

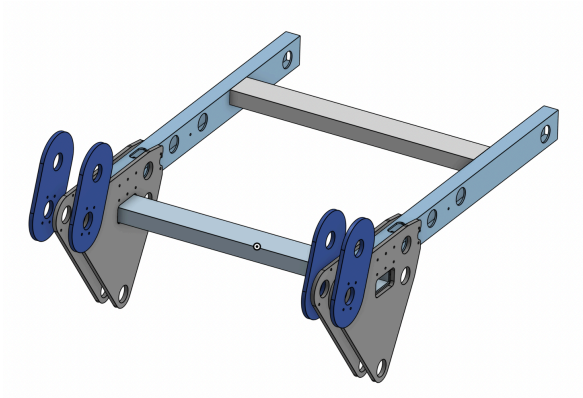

← Intake

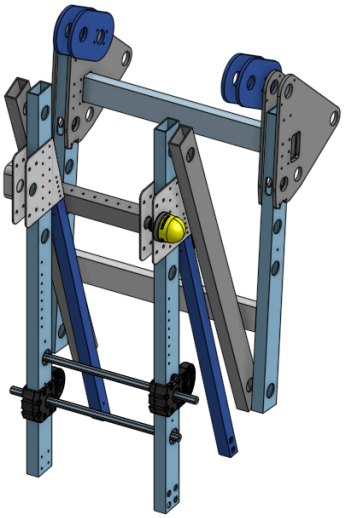

← Arm

Drivetrain

Design: Our drivetrain has a 4-wheel swerve drive powered by 4 Neo and 4 Neo 550 motors with aluminum wheels. It also has a 26" by 27" aluminum frame, topped with an aluminum electrical board. The protective bumpers are attached with steel fittings and have curved corners and a 10" gap on the side of the intake.

Goal for system: In this drivetrain we emphasized agility and speed by including 14 teeth pinion gears for a robot that would be able to achieve 5-7 cycles each round. In pre-season we prepared our swerve drive train that would provide the best mobility and speed, allowing us to have 360° of rotation and movement, removing any hindrance of control from our driver team. We also gave our robot a smaller frame, taking up less space on the charge station to fit alliance members and allowing for a more streamlined design coinciding with our goal of mobility. Along with this we also utilized rough conveyor belt treads for better traction and stability on the charging station. This drive train is built of aluminum parts with rebar and steel sheets fastened inside with additional ballasts on the underside of the electrical board amounting to 19.7 lbs in added weight, to purposefully weigh down the robot, bringing its center of gravity down and allowing it to stabilize. Moreover, on the perimeter of our frame are the bumpers which factor this streamlined design with curved corners that prevent catching. These bumpers are attached with steel brackets that also bring more weight to the bottom of the robot. Additionally, the bumpers have a strategic gap on the intake side allowing the robot to have closer proximity to the scoring nodes.

Fabrication: The drive train's aluminum frame was fabricated from 2''x1'' aluminum beams with 1'' lightening holes cut from our drill press to conserve some weight on the drivetrain. Our team cut the aluminum electrical board using a bandsaw and files from a 3'x3' aluminum sheet. We attached gussets and the electrical board with rivets to the beams. We worked on them from Week 2 to Week 4, starting early and narrowing down on its construction when the final drivetrain design was decided in Week 3. We worked on the electrical board on Week 3 and Week 4. Through this process we had some errors in measuring but it acted as a great learning experience for our new members and we were able to repair the damages with little complication. Our bumpers were made with standard 4''x1.75'' plywood, surrounded by pool noodles attached with duct tape, and standard Dacron bumper fabric. We worked on the bumpers from Week 3 to Week 6, reserved as a component of the robot for novice members to focus on to develop skills and confidence in their fabrication abilities. During Week 5 we made a number of notable changes including adding steel sheets to three side sections of the aluminum drivetrain as well as ballasts on the bottom of the electrical board for the purpose of lowering the center of gravity. We also changed from plastic wheels with inbuilt rubber treads to aluminum wheels with detachable conveyor treads for more traction and flexibility with repairs.We also added 14 tooth pinion gears to the swerve modules to increase speed.

Intake

Design: Our design is inspired by the intake of Team 836, with a double roller intake of rubber compliant wheels attached to the end of our double-jointed arm. The design is held together with polycarbonate plates. In between are the rollers, fixed on aluminum axles that rotate by a belt system configured with two NEO motors and six rubber belts. The intake design features a polycarbonate plate behind the rollers to catch cubes and another movable roller that drops in front of the stationary rollers, allowing us to maneuver held cones.

Our goal for the system: We aimed for our intake to be as versatile and lightweight as possible. Between the Week 2 and Week 3 district events, we remade our intake to reduce its weight and complexity. This new intake design allows us to pick up cubes and upright cones from both the single and double substations and the ground. The design can pick up cubes with two stationary rollers positioned 6.9", and take in cones through the 0.9" gap between the top roller and the swiveling "finger" roller. The finger also allows the intake to maneuver stored game pieces to score at every height. The intake also features the ability to rotate cones with 300° of rotation from the finger to score backwards in the high nodes. This mobility, along with the vast range of the arm allows Corb to have a swift and versatile game strategy.

Fabrication: The intake's assembly started from the very beginning of the season. Due to the nature of the game, Week 1 itself focused brainstorming on whether our intake system would allow for cubes, cones, or both. In the end we opted for a system that would maximize both our robots ability and versatility, and allow for pickup of cubes as well as cones. From there we designed the CAD model, and

prototyped during Week 2. The polycarb frame was fabricated using our CNC machine in Week 3 and the rest of the intake was assembled by our mechanical subteam from then until Week 6. Because of the intake's motorized belt system our electrical subteam had a lot of wire organization to manage, using zip ties and zip tie mounts to bind the wires away from the intake's center and maintain a neat appearance. However, in the process of the robot's testing, we faced issues with the intake. That is why between the Week 2 and Week 3 events we redesigned our intake entirely using similar design to our original design while being much lighter and simpler. In Week 5 of competition we added a polycarbonate plate to catch cubes between the rollers and adjusted the intake to allow it to rotate cones for backwards scoring in high.

Arm

Design: Our design is a double jointed arm controlled from the base of the robot. It's separated into the shoulder to elbow and elbow to wrist sections of the arm. Both sections are driven by NEOs at the base of the arm, which are connected to the joints with a chain-and-sprocket system. The arm is made of aluminum 1x2 to minimize weight while still providing enough strength to lift the relatively heavy intake. The arm components are fixed together with steel axle core, keyhole gussets, and right angle gussets.

Goal for system: We prioritized strength and durability. These traits allow our arm to lift the intake to any scoring height while maintaining rigidity and reliability. We also kept the center of gravity low (by placing the arms at the base) to minimize our chances of tipping while fully extended. We used lightweight and strong aluminum arms to accomplish these goals. Our double jointed arm design also gives a wide range of motion, allowing Corb to score at every possible level with a 270 degree arm rotation. The arm is the central offensive tool our robot has, so making it as reliable and fast as possible was a top priority.

Fabrication: We originally used plastic for the shoulder to elbow segment of the arm. However, in Week 5 of build season, we discovered that it lacked the necessary strength, causing it to bend when pulling up the rest of the structure. We had anticipated that this could be an issue, so we swapped out the plastic for carbon fiber pieces that we had fabricated beforehand. In Week 8 the decision was made to reinforce the strength of the upper arm with aluminum pieces instead of the carbon

fiber. With each of these changes we unfortunately took away from the low center of gravity that our lightweight robot needed, but these changes elevated the strength of our arm system. Further, we had many changes to the system of the arm movement. Initially we were using a combination of two pulley systems, one for the upper arm and one for the forearm. We were using a paracord string we had in our storage from past seasons but we later opted for kevlar that would remain strong and flexible for all the motion the arm experiences. However, the dual pulley was proving unreliable upon further testing, which is why in Week 5 changes were made to the pulley system for the upper arm to a gear and chain system. We used aluminum axles for the shoulder joint and steel axles for the elbow and wrist joints for a lower center of gravity. Another change we made was to the spool where the kevlar string wrapped around. In the beginning, the kevlar string, instead of wrapping around the spool like it was supposed to, wrapped around the axle as well. The team 3D printed a piece which confined the string to only wrap around the spool. There was also an issue with the arm being released too fast, resulting in the kevlar string to slack and the intake to fall. The solution was to run the arm system slower. Between the Week 3 competition and district champs our mentors, leadership team, and a few experienced students discussed changes we could make to the robot. A key idea was to shorten the A-frame and arm for a few reasons including to lower the center of gravity, increase our ability to automate features, and to generally increase reliability. To accomplish these changes we delegated responsibilities to many different members of the team who could work on their specific area of expertise.

We included newer members of the team in this process by having them execute crucial components like tightening bolts and drilling holes in the A frame.

Control System

Overview

This year our electrical system focused on simplicity. Due to the simpler nature of this game, as our team had discussed in our strategizing and brainstorming, we decided to focus the robot's overall design and components to be less complex and more effective in order to have the best chance at standing out at competition. For the electric system, this meant keeping it to the most vital pieces and nothing more. In past years we have always implemented pneumatics, however for this year's game we determined that it would simply be excessive and cut it from the design entirely. Moreover, because of the robot's slimmer frame (as detailed in the drive train section) space management was a major priority. For this reason the control system spans the lower and upper sides of the electrical board. Our largest obstacle by far with the control system was wiring over the double jointed arm with 270° of rotation, which involved significant wire management and organization.

Our Design

With simplicity as the theme to our control system, our design holds all the standard components for an FRC robot: a 12V battery, Beelink computer, RSL, RIO, PDH, radio, RPM, and spark maxes. Besides these elements the robot has 14 motors and a camera connected to the control system. The PDH, battery, and most of the other components are on the top side of the electrical board, whereas the RPM, spark maxes, and RIO are held on the bottom side. With the robot being a lot slimmer we

needed to manage our space as efficiently as possible, which is also why most of the controlled components are held near the base of the robot, including most of the motors, the radio, and spark maxes. By keeping these components near the base of the robot we were also able to add more weight to the bottom, keeping the center of gravity low. Furthermore, the most complicated and innovative part of the control system's design is having to wire over the robot's double jointed and wide rotation arm(as detailed in the arm section). In order to do this we wired the encoders through the Spark Maxes, simplifying the amount of wires that needed to be run over the arm.When approaching cable management around the arm we needed to leave enough slack for the robot to keep its full range of motion. With the simplicity of the robot, we know that any issues with the wiring to the intake on either side can be rooted to either cable chain section and ensure for unproblematic troubleshooting. As for troubleshooting overall, besides the motors on the intake, all our electrical components are held close to the base of the robot and that proximity means that most issues can be diagnosed and resolved relatively easily.

Improvement

Much of this season's improvement came from the nature of this year's game and our approach to the game. Last year we were very ambitious with our robot's systems which led to a lot of complications and errors in the control system. This year with our simple and contained design strategy we were able to focus our energy on understanding and tracking the control system, also acting as a great learning opportunity for our novice members to have a firm understanding of the control system. Additionally, not having a pneumatic system aided in our approach

as we were able to maintain the functionality of our robot with our rope and spring system in the arm while removing the complexity of another whole system to account for in the control system design and electrical board space.

Programming

Overview

This year the goal for our programming team was to simplify and strengthen our robot with automation wherever possible. This means taking the load of our driver team with features like auto-positioning and path tracking as well as adding to the versatility and ability of our robot with innovative features like auto-balancing. We were able to achieve these features with thorough research, planning, and testing. This process involved close work with our driver team as well as passing down this year's successes and failures to new members to improve upon our developments for future years.

Auto-Balancing

The auto balancing system is based on the robot's gyroscope. The gyroscope detects the angle the robot is at and sends that information to the RIO which relays it to the radio and by extension the code. The code then tells the robot to either drive forward or backward depending on the angle detected and measured said angle. The robot will continue this until the angle is within 2.5 degrees of 0 in either direction. Furthermore, with our swerve module drivetrain we accounted for movement up the docking station from all entrance angles. We did so with data from our gyroscope and path tracking, enabling us to utilize odometry to orient our movement up the docking station no matter our entrance angle.

Auto-Positioning

Our auto positioning system uses preset positions to increase efficiency and reliability when scoring. With path tracking and multiple encoder sensors along the arm that track motor rotation, Corb calculates the movement required to place the game piece in the correct area. This software involves all the mechanical components of a robot as the intake and arm lift to the optimal position to score at which height we need at that moment (high, mid, or low). This saves time for our drivers and provides reliability by avoiding manual scoring for adjusting the arm to the correct location by sight alone.

Path Tracking
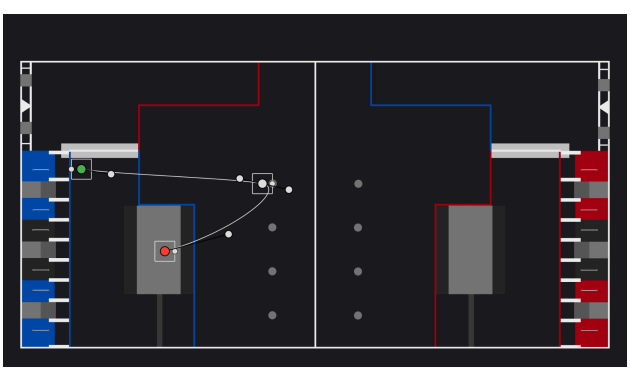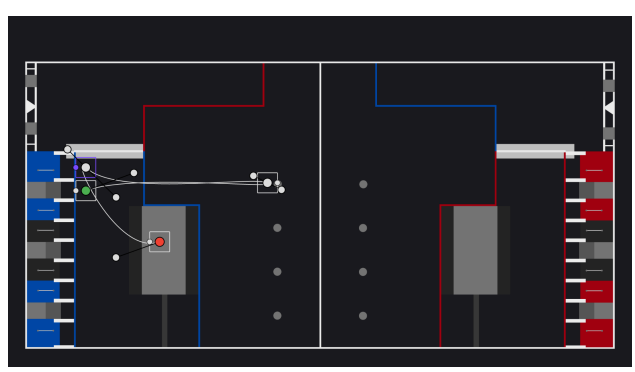
Our robot utilizes path tracking, primarily in the autonomous segment of the game. The robot is able to visualize the game field and through consistent testing and optimization we are able to narrow down optimal paths for the robot to follow in the autonomous segment of the game to complete desired tasks in auton, complementing our alliance members. This software also accounts for our holonomic drive, meaning we utilize our swerve drives ability to move in any direction while making our movements smoother and to save time. Below we have visualizations for scoring one cone in auton, picking up a cube, and balancing (left) as well as scoring cone in auton, picking up a cube, scoring, and balancing (right).